Service Manual

WR-11

2 Bands Radio Receiver

CONTENTS

Specification 2-5
Block Diagram 6
Main PCB Top View 7
Main PCB Bottom View 8
PCB-P Top View 9
PCB-P Bottom View 10
Wiring Diagram 11
Troubleshooting Flow Chart 12-14
Electrical Parts List 15-17
Mechanical Parts List 18-19
Exploded Views 20
IC Circuit Block Diagram 21-25
Semiconductor Lead Identifications 26
IC and Transistor Voltage Chart 27-29
All Schematic Diagram 30

Rev.C: IC LA1805 end of life
Date:2014/6/10
Service manual & End User Notes
Compliments: RealOldiesRadio.com

Specification

FM. ELECTRICAL PERFORMANCE

Model：WR-11(FCC)	Brand：SANGEAN	Date：2014/5/26
Temp：25° C	R.H：75%	

Test Item	Condition			Value		Unit
	Input	Output	freq	Nom.	Lim.	
Tuning Range		S/N=6dB	Min	87.5	88	MHz
		S/N=6dB	Max	108.2	108	
Max. Sensitivity		S/N=6dB	90	8	14	dBμ
			98	8	14	
			106	8	14	
Usable Sensitivity		S/N=30dB	90	15	21	dBμ
			98	15	21	
			106	15	21	
Stereo Ind. Sens. 75K DEV			106MHz			dB
Stereo Separation(1KHz) 75K DEV (PILOT ON)			98MHz			dB
3db Limiting(1mV)		Rated output	98MHz	8	14	dBμ
Min. output	60dBμ		98MHz	0.5	2	mv
Tuning Indicator Sens.			98MHz	16	22	
Auto Tuning Stop Sens.			98MHz			dBμ
Current Consumption	60dBμ		98MHz	200	300	mA
S/N Ratio	60dBμ		98MHz	50	44	dB
Am. suppression	60dBμ		98MHz	46	30	dB
Output Power Mod. 75kHz@100Hz	Speaker8Ω	10% THD	98MHz	6.5	6	W
	Load 32Ω			5+5	3+3	mW
T.H.D. (75KHz dev.)		R.O.	98MHz	1	3	%
Calibration		S/N=6dB	90M		±1000	KHZ
			96M			
			104M			
Over load capacity		10% THD	98MHz		>106	dBμ
Audio-fidelity-3dB (W/Pre-emphasis)50uS CE-VERSION(CE-Europe)	60dBμ		98MHz	50	30	HZ
				15K	12K	HZ
Audio-fidelity-3dB (W/Pre-emphasis)75uS US-VERSION(FCC-USA)	60dBμ		98MHz	50	30	HZ
				15K	12K	HZ
REC OUT LEVEL FM DEV=22.5KHZ	60dBμ	@1KHZ	98MHz	130	+80/-40	mV

Supply Voltage： AC120V/60Hz(USA)	R.O：50mW	Load：8 Ohm
Modulation：Dev.22.5kHz@1KHz		
Remark：REC out Load =10Kohm USA - Test output power to the speaker load	Approved by：	Released / Tested by：

Specification
AM ELECTRICAL PERFORMANCE

Model：WR-11(FCC)	Brand：SANGEAN	Date：2014/5/26
Temp：25° C	R.H：75%	

Test Item	Condition			Value		Unit
	Input	Output	freq	Nom.	Lim.	
Tuning Range		S/N=6dB	Min.	520	525	kHz
		S/N=6dB	Max.	1730	1715	
Max. Sensitivity		S/N=6dB	603/600 k	48	54	dBμ/m
			999/1000k	48	54	
			1404/1400k	46	52	
Usable Sensitivity		S/N= 20dB	603/600 k	52	58	dBμ/m
			999/1000k	50	56	
			1404/1400k	50	56	
AM EXT. ANT Usable Sensitivity (USA/Tw Only)		S/N= 20dB	600k	18	24	dBμ
			1000k	18	24	dBμ
			1400k	18	24	dBμ
T. H. D.	74dBu/m	R.O	999/1000 KHZ	1	3	%
Auto Tuning Stop Sens.						dBμ
Tuning Indicator Sens.				40	50	dB
S/N Ratio	74dBu/m			38	32	dB
Current Consumption		R.O		200	300	mA
Audio fidelity (-6dB)	1K=0dB				100	Hz
					2	KHz
Output power Mod 80% @ 100Hz	94dBμ/m	10%THD		6.5	6	W
Over Load Capacity	80%	10%THD		100	>90	dBμ/m
A. G. C. F. O. M.	100dBμ/m			50	40	dB
Callbration			700		±60	
			1200		±60	
			1700		±60	
Whistle Modulation	74dBu/m					

Supply Voltage：AC120V/60Hz(USA)	R.O：50mW	Load：8 Ohm
Modulation：Dev.30% @400Hz		
Remark：USA Test output power to the speaker load	Approved by：	Released / Tested by：

Specification

AUX-IN ELECTRICAL PERFORMANCE

Model：WR-11(FCC)	Brand：SANGEAN	Date：2014/5/26
Temp：25° C	R.H：75%	

Test Item	Condition		Value Nom.	Value Lim.	Unit
Output Power	AUX IN=0.5V/100Hz THD=10%		6.5	6	W
AUX IN Dynamic Range	Output=R.0 /THD=<3% AUX IN=100Hz		1.2	1	Vrms
I/S (Input Sensitivity)	AUX IN=100Hz OUTPUT @ THD 10% Volume=MAX		320	±50	mV
DISTORTION	AUX IN =I/S 1KHz OUT=R.O		0.1	<0.4	%
MIN OUTPUT	AUX IN =I/S 1KHz Volume=MIN		0.5	<2	mV
S/N RATIO	AUX IN =I/S 1KHz&GND OUT=R.O (weighted DIN audio)		60	52	dB
Frequency Response	AUX IN=0.5V/1KHz OUT=50mW=1kHz=0db	100HZ	10	8	dB
		10KHZ	4	2	
REC OUT LEVEL	AUX IN=(-10dB)300mV@1khz		310	±80	mV

Supply Voltage：AC 120V/60Hz(USA)	R.O：50mW	Load：8-OHM
Remark：REC out Load =10Kohm USA - Test output power to the speaker load	Approved by：	Released / Tested by：

Specification

BLUETOOTH ELECTRICAL PERFORMANCE

Model：WR-11(FCC)	Brand：SANGEAN	Date：2014/5/26
Temp：25° C	R.H：75%	

Test Item	Condition		Value Nom.	Value Lim.	Unit
Transferring distance	Directive distance			>10	m
access time for link				<15	Sec
Playing Frequency Response	MP3 1KHz 0dB 128kbps Output = 50mW	100Hz	7	5	dB
		10KHz	4	2	dB
S/N Ratio	MP3 1KHz 0dB 128kbps weighted- DIN audio;@500mW		70	60	dB
THD Of Playing	MP3 1KHz 0dB 128kbps weighted- DIN audio; @500mW			<1	%
Current Consumption	MP3 1kHz 0dB 128kbps Output = R.O=@500mW		330	400	mA
Output power	MP3 1kHz 0dB 128kbps T.H.D. = 10%		6.5	6	W
REC OUT LEVEL	MP3 1kHz 0dB 128kbps		920	±150	mV

Supply Voltage：AC120V/60Hz(USA)	R.O：500mW	Load：8Ω
Remark：USA - Test output power to the speaker load No Bluetooth feature, this page without testing REC out Load =10Koh	Approved by：	Released / Tested by：

BLOCK DIAGRAM

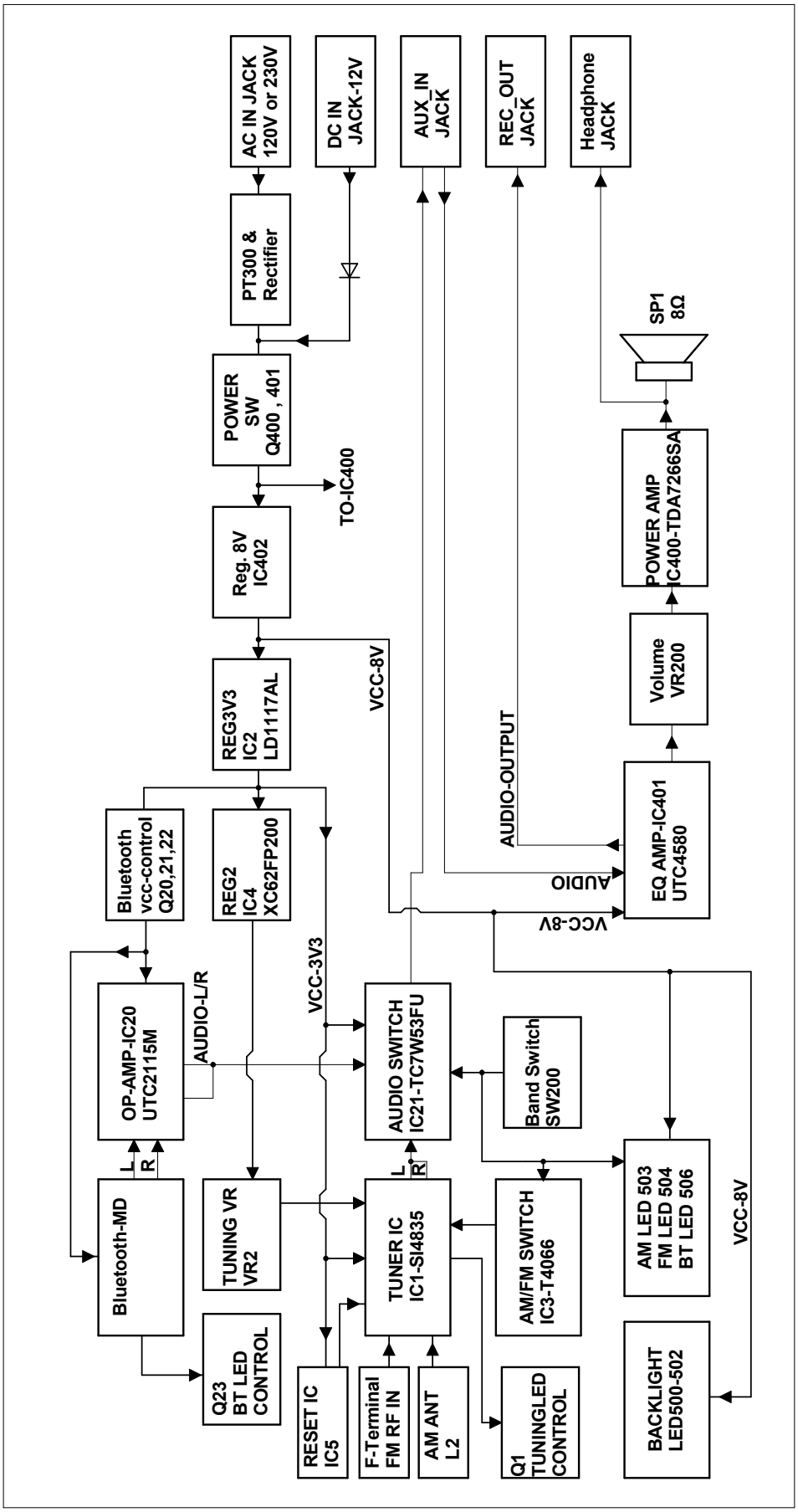

MAIN PCB TOP VIEW

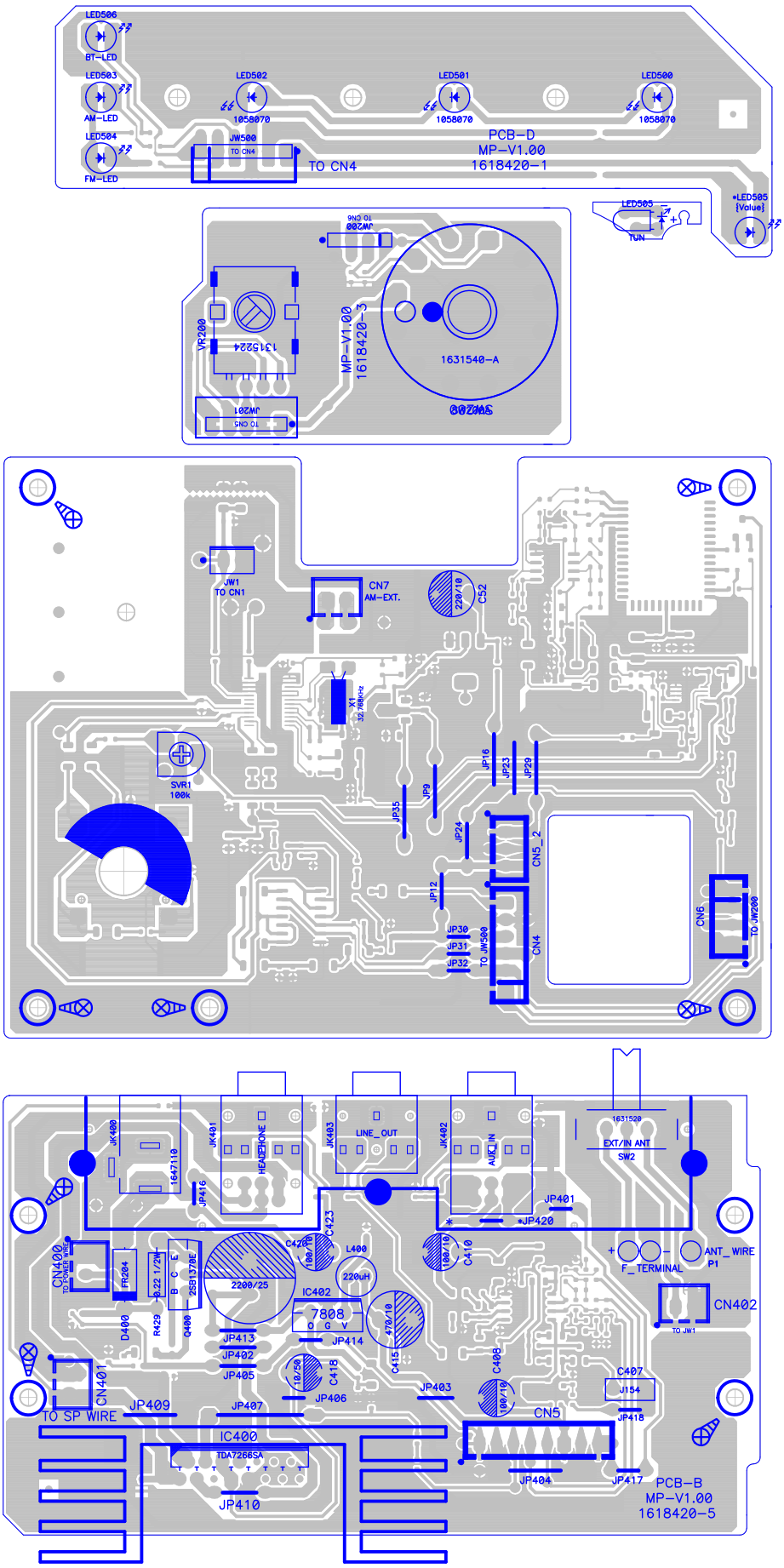

MAIN PCB BOTTOM VIEW

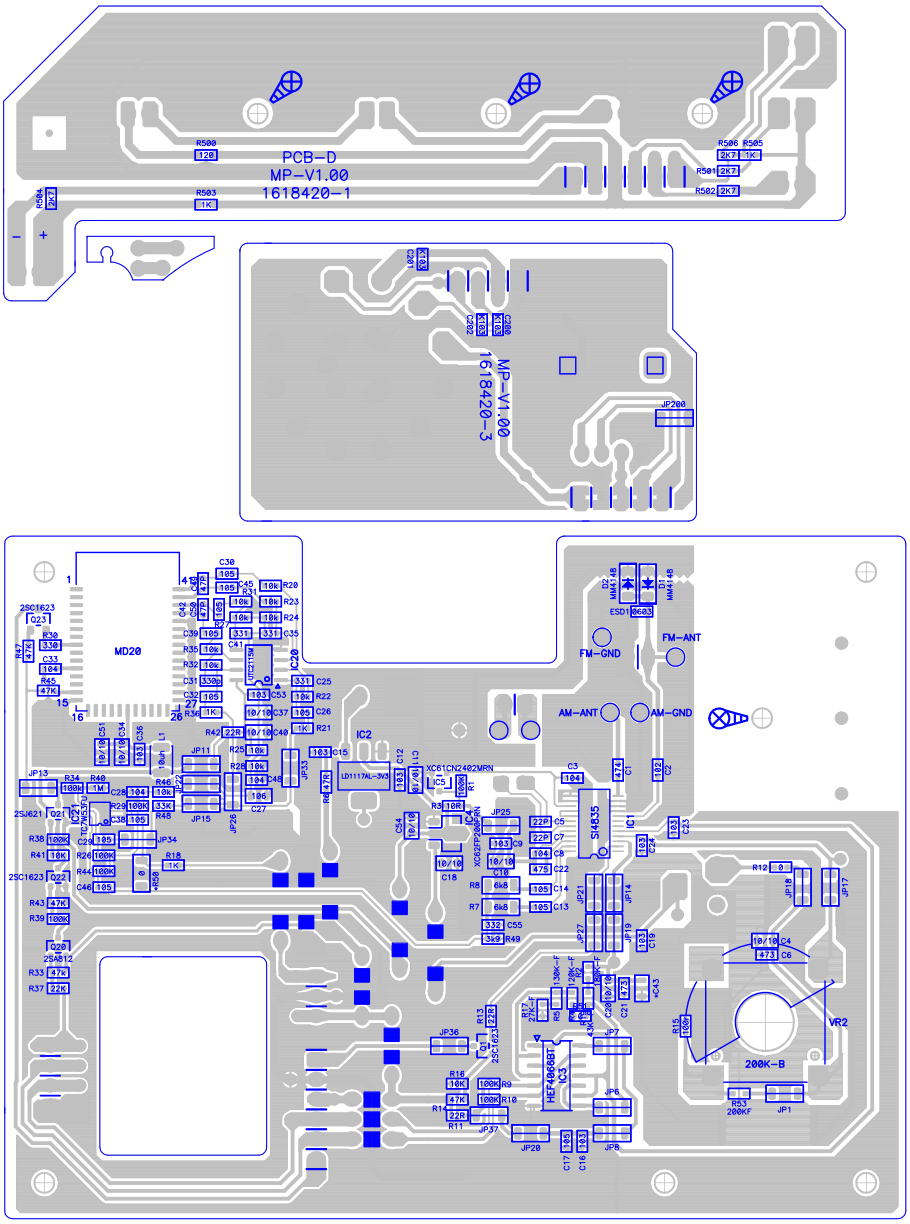

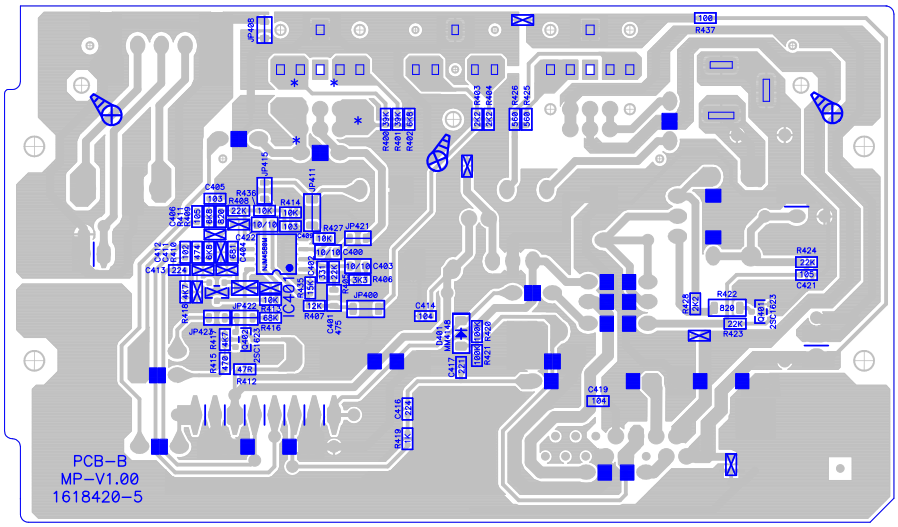

PCB-P TOP VIEW

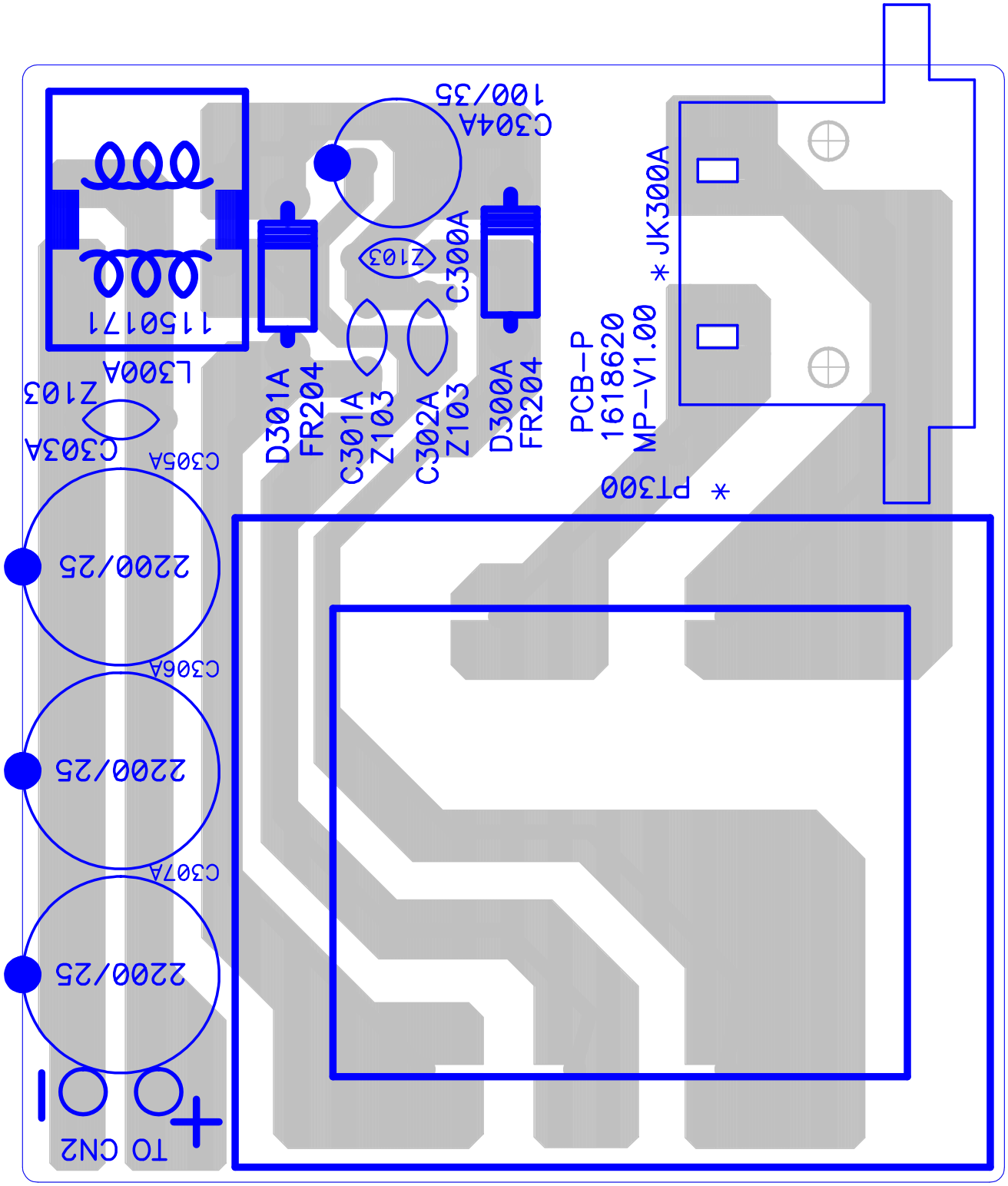

PCB-P BOTTOM VIEW

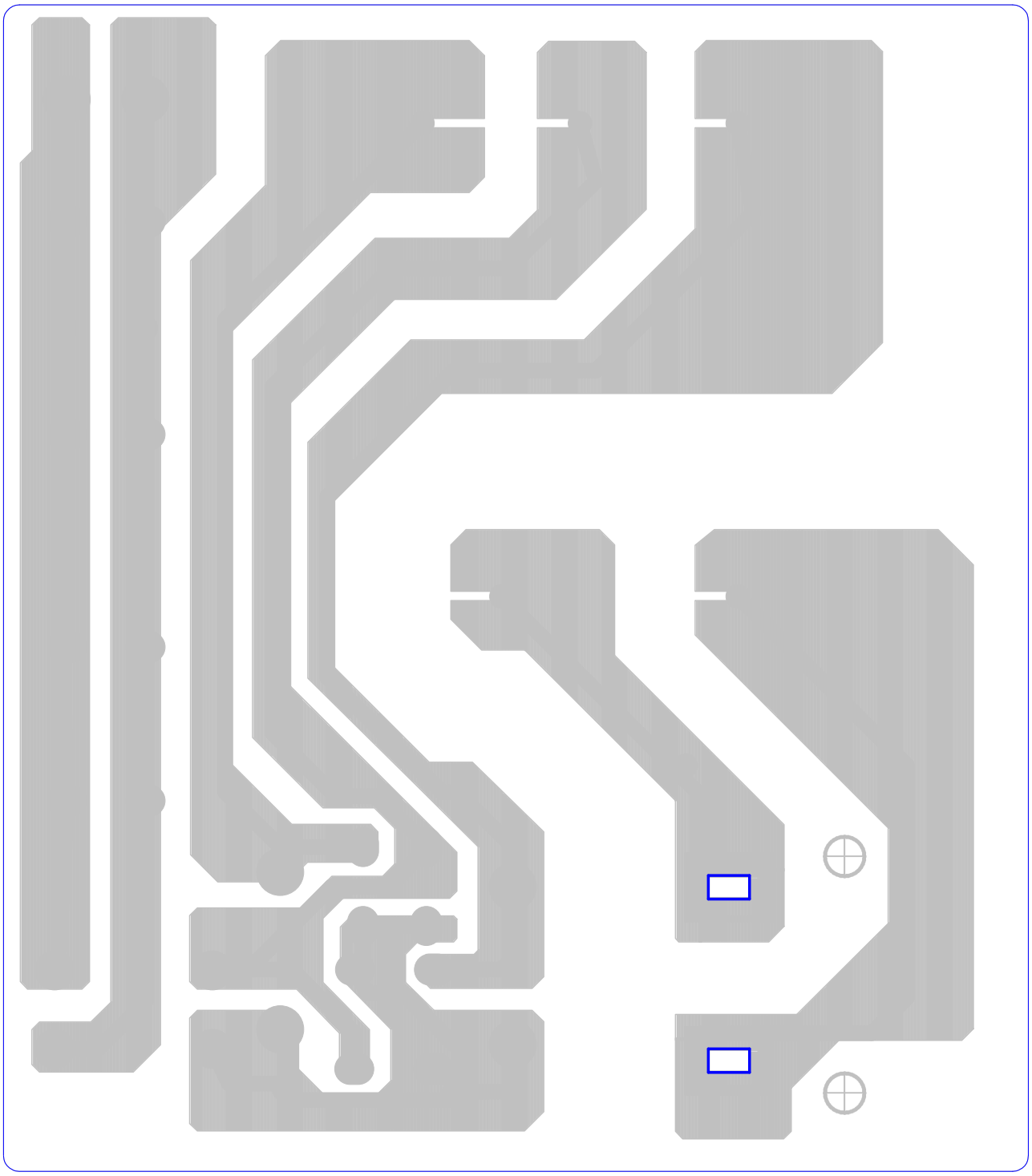

WIRING DIAGRAM

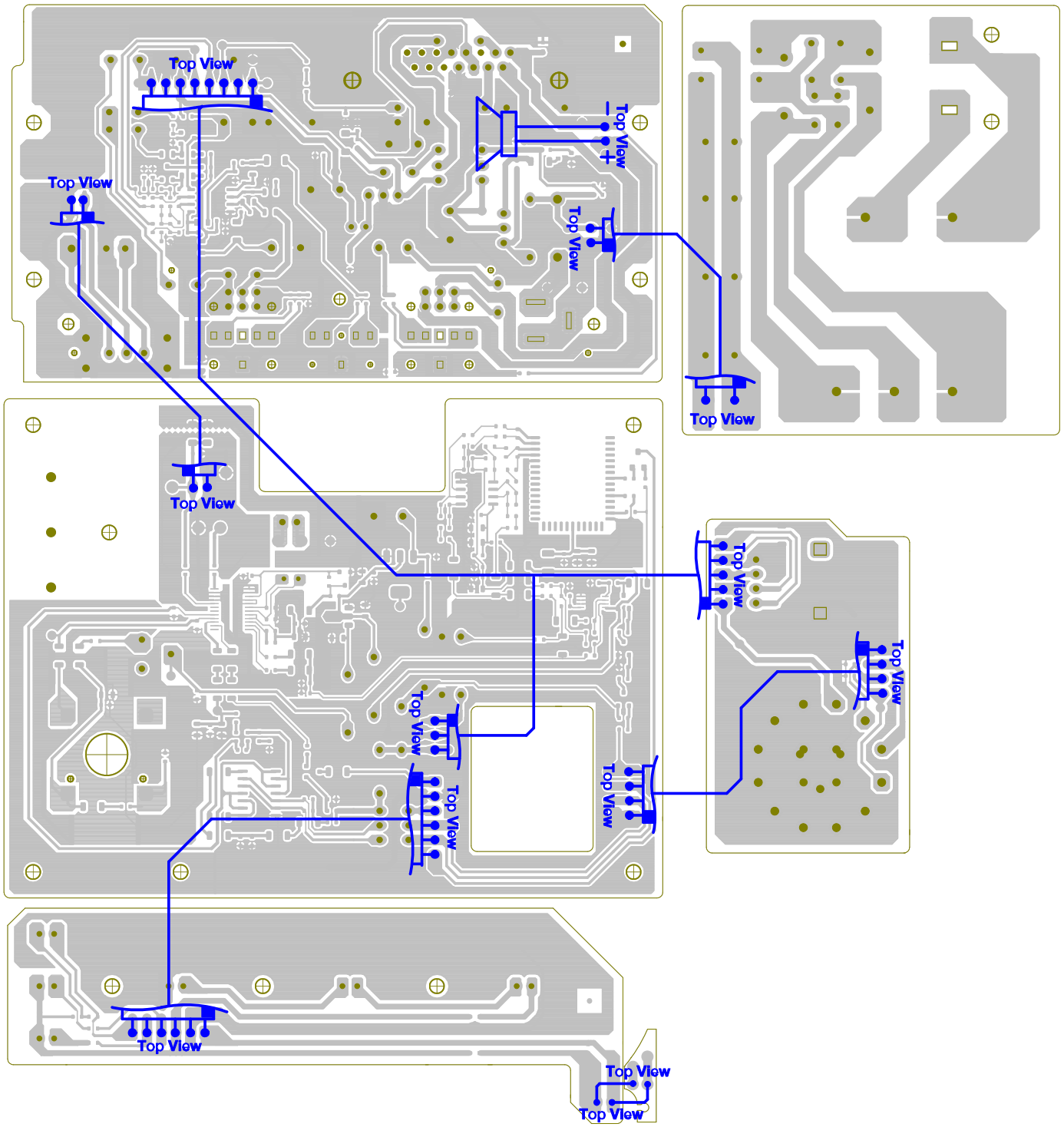

TROUBLESHOOTING FLOW CHART

(1) Power can not be turned on

Check whether the Q400 is normal, must have voltage is 12Vdc.

No → Check whether the PT300 is normal. check whether the C306 must have voltage is 12Vdc.

Yes ↓

Check whether the IC402 is normal, must have voltage is 8Vdc.

No → Check whether the IC402 input is normal, must have voltage is 12Vdc.

Yes ↓

Check whether the C415 must have voltage is 8Vdc.

Yes ↓

Check whether the CN5_2-PIN3 must have Voltage is 8Vdc.

No → Check whether CN5_2 wire is normal connect to connector(CN5).

(2) FMor AM band can not be turned on

Check whether the IC2 is normal, must have voltage is 3.3Vdc.

No → Check whether the IC402 is normal, must have voltage is 8Vdc.

Yes ↓

Check whether the IC4 is normal, must have voltage is 2Vdc.

Yes ↓

Check whether the IC3 is normal, pin14 voltage is 8Vdc.

(3) Bluetooth cannot be turned on

Note: Check smartphone or tablet whether the bluetooth function is turned on,

smartphone or tablet bluetooth should be searched for SANGEAN WR-11

Check whether the bluetooth module
Is normal.
bluetooth LED should be flash.

No →

◎Check whether the Q21 is normal,
must have voltage is 3.3Vdc.
◎Check whether Q22 and Q20 is turned on.
◎Check whether the bluetooth nodule pin21 have voltage is 3.3Vdc.
◎Check whether the bluetooth module pin14 have voltage is 3Vdc.
◎Check whether the IC2 is normal,
must have voltage is 3.3Vdc.

Yes ↓

Check whether the NFC is normal.

(4) Bluetooth cannot sound output

Note: Only support Bluetooth version 2.1 or later version

smartphone or tablet bluetooth must connected to SANGEAN WR-11

Check whether the IC20 is normal,
pin8 must have voltage is 3.3Vdc.

No → Check whether the R42 is normal,
must have voltage is 3.3Vdc.

Yes ↓

Check whether the IC21 is normal,
pin5 must have voltage is 3Vdc.

Check whether the R34 is normal,
must have voltage is 3.3Vdc.

Yes ↓

Check whether the IC21 is normal,
pin1 must have audio output.

No → Check whether the IC20 is normal,
pin1&7 must have audio output.

(5) Cannot be output sound

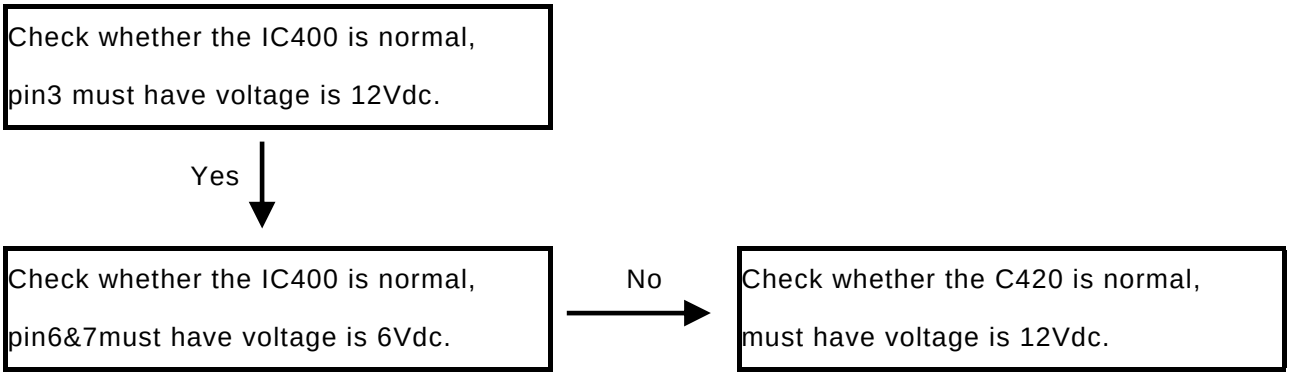

ELECTRICAL PARTS LIST

000YE0S1C **WR-11** **Date：2014/05/22**

PART NO.	DESCRIPTION	Q'TY	REMARK
1012892	CH IC XC62FP2002PRN	1	IC4,
1013663	CH IC UTC4580E SOP8	1	IC401,
1013760	IC L7808CV TO-220	1	IC402,
1014010	CH IC XC61CN2402MRN	1	IC5,
1014821	CH IC HEF4066BT	1	IC3,
1015240	CH IC LD1117AL33 AA3-AR	1	IC2,
1017010	IC TDA7266SA	1	IC400,
1018990	CH IC Si4835-B30-GU SSOP-24	1	IC1,
1021051	TR 2SB834L-Y-TF3-T TO-220F	1	Q400,
1022560	CH TR 2SC1623-L6 SOT-23	3	Q1,Q401,Q402,
1041241T	DIODE FR204-T	3	D400,
			D300A,D301A,
1046011	CH DIODE MM4148	3	D1,D2,D401,
1053270	LED GRN 5φ 50AZC2D-009	2	LED503,LED504,
1053300	LED GRN 3Ø 30AZC1D-005	1	LED505,
1058073	LED GRN 4.5Ø 444GM1D-001/G97	3	LED500,LED501,LED502,
1111900	BAR ANT & COIL 1900 AM	1	L2,
1150172	TOROID COIL 600uH 17.5Ø	1	L300A,
116224K2U17	WOUND-V 220μHK 6Øx8	1	L400,
1315224	R-VR 20KB RV110TF-40E1	1	VR200,
131AF2F	CH R-VR 200KB RD15L1134002	1	VR2,
1320396	S.F-VR 100K TB067A-0D	1	SVR1,
1618420	PCB A WR-11B 1.6T/1	1	
1618620	PCB P WR-11B 1.6T/1	1	
1621350	SPK 3" 8Ω 10W	1	
1631520	SILD SW.1P2C	1	SW2,
1631990	ROT/SW2612F-0403-15F5B	1	SW200,
1640040	JACK EP 3.5φ W/SW GRN	1	JK402,
1640060	JACK EP 3.5φ W/SW BLK	1	JK401,
1640161R	JACK EP 3.5Ø N/SW ST RED	1	JK403,
1646050	AC SOCKET HJC-037AP	1	JK300A,
1647110	JACK DC HTJ-020-04AZ	1	JK400,
1650150	X'TAL 32.768KHZ±10Ppm 2×6	1	X1,
1701H2502V023	HOUSING 2.5×2P-V	4	CN400,CN401,CN402,CN7,
1701H2503V013	HOUSING 2.5×3P-V	2	CN5_2,CN6,
1701H2505V013	HOUSING 2.5×5P-V	1	CN4,
1701H2508V023	HOUSING 2.5×8P-V	1	CN5,
17031015502U	CNT/W-A 100(2.5+5P)	1	JW500,
17031615204U	CNT/W-A 160(2.5+2P)	1	POWER WIRE,
17032215203U	CNT/W-A 220(2.5+2P)	1	SP WIRE,
17032215204U	CNT/W-A 220(2.5+2P)	1	AM EXT,
17038005302U	CNT/W-A 80(2.5+3P)	1	JW200,
17062215207U	CNT/W-S 220(2.5+2P)	1	JW1,

ELECTRICAL PARTS LIST

000YE0S1C **WR-11** **Date：2014/05/22**

PART NO.	DESCRIPTION	Q'TY	REMARK
17062215802U	CNT/W-S 220(2.5+8P)	1	CN5-WIRE,
170A7001203U	W-A/2 70(3+3)	1	LED WIRE,
170D700E201U	W-S/2 70(5+5)	1	F_TERMINAL,
1720333	X'FM 120V 11V/1A UL	1	PT300A,
1900431	F FEMALE BULKHEAD	1	
1A0529650MCU	W-A/1 650(3+0) WHT	1	FM WIRE,
1A8000010	W/JUMP 5(10)0.6mm	9	JP30,JP31,JP32,JP406,JP414,
			JP416,JP417,JP418,JP401,
1A8000030	W/JUMP 7.5(10)0.6mm	7	JP12,JP24,JP402,JP403,JP405,
			JP410,JP413,
1A8000040	W/JUMP 10(10)0.6mm	7	JP9,JP16,JP23,JP29,JP35,JP404,JP409,
1A8000090	W/JUMP 15(10)0.6mm	1	JP407,
3A86K604B	AC CORD 1.9m UL BLK	1	
3A88K610B	F PLUG ANT WIRE BLK	1	
4110364CT	CC 103Z 50V F-T	4	C300A,C301A,C302A,C303A,
4410665AT1H0	EL 106M 50V 5x11-T 105	1	C418,
4410725AT1H0	EL 107M 10V 5x11-T 105	3	C408,C410,C423,
4410758AT1H0	EL 107M 35V 8x11-T 105	1	C304A,
4422726AT1H0	EL 227M 10V 6.3x11-T 105	1	C52,
442284CHT0H0	EL 228M 25V 13x21-T 105	4	C420,C305A,C306A,C307A,
4447726AT1H0	EL 477M 10V 6.3x11-T 105	1	C415,
4815472T0	MP/C 154J 63V-T P=5mm	1	C407,
5410261	CH CC 102K 50V X7R-C	2	C2,C412,
5410361	CH CC 103K 50V X7R-C	12	C9,C12,C15,C16,C19,C23,C24,
			C200,C201,C202,C405,C409,
5410467	CH CC 104K 25V X7R-C	4	C3,C8,C414,C419,
5410590	CH CC 105K 10V X5R-C	5	C17,C13,C14,C406,C421,
5422001	CH CC 220J 50V NPO-C	2	C5,C7,
5422101	CH CC 221J 50V NPO-C	1	C417,
5422478	CH CC 224K 10V X7R-C	2	C416,C413,
5433101	CH CC 331J 50V NPO-C	1	C402,
5433261	CH CC 332K 50V X7R-C	1	C55,
5447361	CH CC 473K 50V X7R-C	2	C6,C21,
5447466	CH CC 474K 16V X7R-C	2	C1,C411,
5447589	CH CC 475K 6.3V X5R-C	1	C22,
5468161	CH CC 681K 50V X7R-C	1	C404,
5510673	CH CC 106Z 10V Y5V-A	9	C4,C10,C11,C18,C20,C54,C400,
			C403,C422,
5547572	CH CC 475Z 16V Y5V-A	1	C401,
61301000	CH RD 0J-0603	2	R51,R12,
61301100	CH RD 10J-0603	1	R3,
61301101	CH RD 100J-0603	2	R15,R437,
61301102	CH RD 1KJ-0603	3	R18,R419,R503,

ELECTRICAL PARTS LIST

000YE0S1C **WR-11** **Date：2014/05/22**

PART NO.	DESCRIPTION	Q'TY	REMARK
61301103	CH RD 10KJ-0603	5	R16,R413,R414,R427,R436,
61301104	CH RD 100KJ-0603	5	R1,R9,R10,R420,R421,
61301121	CH RD 120J-0603	1	R500,
61301220	CH RD 22J-0603	2	R11,R13,
61301222	CH RD 2K2J-0603	3	R403,R404,R428,
61301223	CH RD 22KJ-0603	4	R405,R408,R423,R424,
61301272	CH RD 2K7J-0603	3	R501,R502,R504,
61301332	CH RD 3K3J-0603	1	R406,
61301392	CH RD 3K9J-0603	1	R49,
61301393	CH RD 39KJ-0603	2	R400,R401,
61301470	CH RD 47J-0603	2	R6,R412,
61301471	CH RD 470J-0603	1	R415,
61301472	CH RD 4K7J-0603	2	R417,R418,
61301473	CH RD 47KJ-0603	1	R14,
61301561	CH RD 560J-0603	2	R425,R426,
61301682	CH RD 6K8J-0603	3	R402,R410,R411,
61301683	CH RD 68KJ-0603	1	R416,
61301821	CH RD 820J-0603	1	R409,
61321123	CH RD 12KF-0603	1	R407,
61321124	CH RD 120KF-0603	1	R4,
61321134	CH RD 130KF-0603	1	R5,
61321153	CH RD 15KF-0603	1	R435,
61321184	CH RD 180KF-0603	1	R2,
61321204	CH RD 200KF-0603	1	R53,
61321273	CH RD 27KF-0603	1	R17,
61321433	CH RD 43KF-0603	1	R19,
61501000	CH RD 0J-1206	18	JP6,JP7,JP8,JP14,JP17,JP18,
			JP19,JP20,JP21,JP25,JP27,JP36,
			JP37,JP200,JP411,JP400,R50,JP1,
61501682	CH RD 6K8J-1206	2	R7,R8,
61501821	CH RD 820J-1206	1	R422,
61801000	CH RD 0J-0805	5	JP421,JP422,JP423,JP408,JP415,
66300R22T	FRN 1/2W R22J-T	1	R429,

MECHANICAL PARTS LIST

000YE0S1C **WR-11** **Date:2014/5/21**

Ref no	PART NO.	DESCRIPTION	Q'TY	DWG NO.	REMARK
1	2000K60000A	BAR ANT HOLDER	1	A4-WR1-06A	
2	2000K600500	BUSHING	1	A4-WR1-57	
3	2000K600300	GEAR DRUM	1	A3-WR1-07A	
4	2000K600400	PHONE JACK HOLDER	1	A3-WR1-25A	
5	2000K6A020A	POINTER CHASSIS	1	A1-WR1-09A/10A	
6	21004901200	ANT TERMINAL PIN	1	A4-818-2089	AMP PCB
7	2100B101100	ROTARY KNOB RING	2	A4-330-38	VOLUMEx1/BANDx1
8	2100TY00300	HEAT SINK	1	A4-TY-21	
9	2100K600100	TUNING SHAFT ASS'Y	1	A1-WR1-01A	FRONT CABINET
10	2300K600100	AC JACK SPONGE	1	A4-WR1-03A	REAR CABINET
11	29S10308002	SCREW PTP 3x8(NI)	2		AC JACK&REAR CABINET
12	29S10105002	SCREW PTP 2x5(NI)	3		PHONE JACK HOLDER&AMP PCB
13	22005600000	P.C.B. HEMELON	2	A4-066-1313	AMP PCBx1/REAR CABINETx1
14	2200S100000	HEMELON 45x25x0.3	1	A4-S1-17A	TUNING PCB
15	23006500100	EVA CUSHION	1	A4-818-1415	BAR
16	29S80308000	SCREW STP 3x8(MC)	2		HEAT SINK
17	2300K600000	PHONE JACK SPONGE	1	A4-WR1-02A	REAR CABINET
18	29R10740801	C RING D7.4x0.8t	1		BUSHING
19	2300K600200	WOOD CASE SPONGE(R/L)	2	A4-WR1-04A	REAR CABINET
20	2300K600300	WOOD CASE SPONGE(U/D)	2	A4-WR1-05A	REAR CABINET
21	2300K600400	PCB SPONGE	1	A4-WR1-35A	BAR
22	29S10206002	SCREW PTP 2.6x6(NI)	7		AMP PCBx4/LCD PCBx3
23	2300K600600	B DOUBLE TAPE	3	A4-WR1-41A	POINTER CHASSIS
24	2300K600700	C DOUBLE TAPE	1	A4-WR1-42A	POINTER CHASSIS
25	2300K601100	SPONGE	1	A4-WR1-48A	REAR CABINET
26	2300K700100	DOUBLE TAPE	2	A4-WR1-51A	FRONT CABINET
27	29S10314002	SCREW PTP 3x14(NI)	6		REAR CABINET
28	29S10504001	SCREW PTP 1.4×4(ZK)	1		LED PCB&FRONT CABINET
29	29S15208002	SCREW PTPW 2.6x8(NI)	5		POINTER CHASSIS
30	29S15308002	SCREW PTPW 3x8(NI)	2		PT&REAR CABINET
31	29S16308002	SCREW PTB 3×8(NI)	4		SPEAKER
32	2300S100400	TAPE(INSULATION)22x8x0.1	1	A4-S1-16A	FRONT CABINET
33	29S10208002	SCREW PTP 2.6x8(NI)	15		BAR ANT HOLDER&TUNING PCBx1
					TUNING SHAFT ASS'Yx2
					POINTER CHASSISx3
					SPEAKER GRILLx4/TUNING PCBx5
34	2400M700200	FOOT RUBBER	4	SJ-5003	WOOD CASE
35	2400S100000	FRONT PARKING	1	A4-S1-13A	FRONT CABINET
36	3010S10U00030	FRONT CABINET	1	A1-S1-01A	
37	3030K61U0024A	REAR CABINET	1	A1-WR1-21A/22A	
38	3050S10000010	DIAL WINDOW	1	A4-S1-09A	
39	3080S1000001A	FRONT PANEL	1	A3-S1-02A	
40	3100S10000010	REVOLVE KNOB	1	A4-S1-07A	VOLUME
41	3101S10000010	REVOLVE KNOB	1	A4-S1-05A	TUNING
42	3102S10000010	REVOLVE KNOB	1	A4-S1-06A	BAND
43	3081S10000010	KNOB PANEL	1	A4-S1-03A	
44	3230S10000010	SPEAKER GRILL	1	A3-S1-10A	
45	3090S10000010	GRILL HOLDER	1	A3-S1-04A	
46	3150K6000008A	DIAL PLATE(BRN)	1	A3-WR1-11A	

MECHANICAL PARTS LIST

000YE0S1C **WR-11** **Date:2014/5/21**

Ref no	PART NO.	DESCRIPTION	Q'TY	DWG NO.	REMARK
47	3280K60000040	POINTER	1	A3-WR1-08A	
48	3290S10000010	LED LIGHT LENS	1	A4-S1-08A	
49	3310S10000010	WOOD CASE	1	A3-S1-11A	
50	29S10108002	SCREW PTP 2x8(NI)	4		POINTER CHASSIS
51	2400K600100	ANT RUBBER	1	A4-WR1-36A	REAR CABINET
52	29S09990018	SCREW JMP 3×8 NI	2		ANT TERMINAL&REAR CABINET
53	2100B100900	ANT TERMINAL	2	A4-330-34	REAR CABINET

EXPLODE VIEW

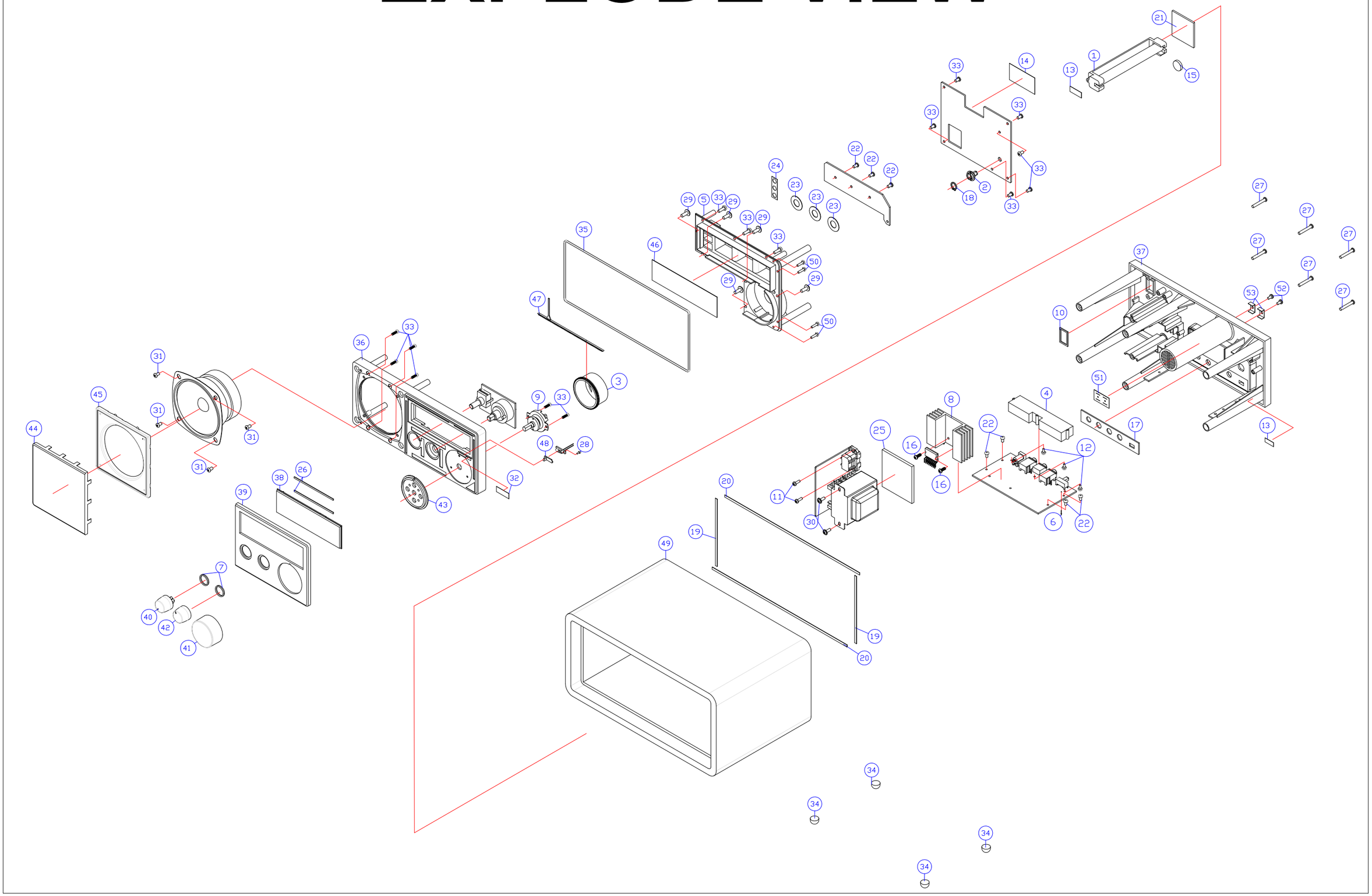

IC CIRCUIT BLOCK DIAGRAM

1. IC1 — Si4835-B30-GU

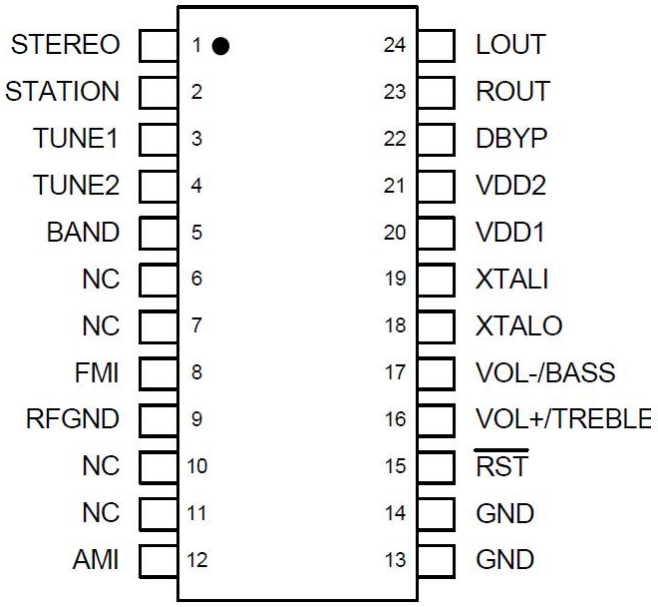

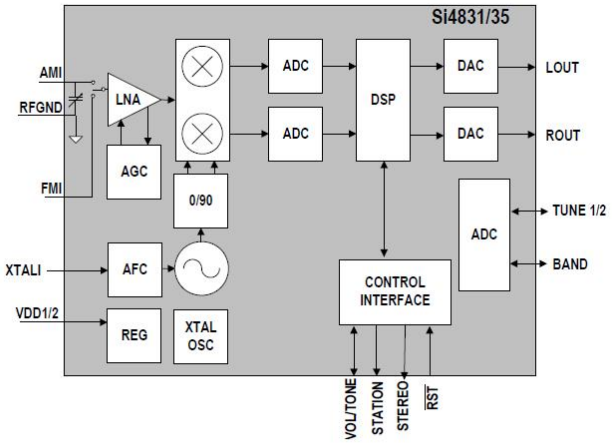

2. IC2 — LD1117AL33

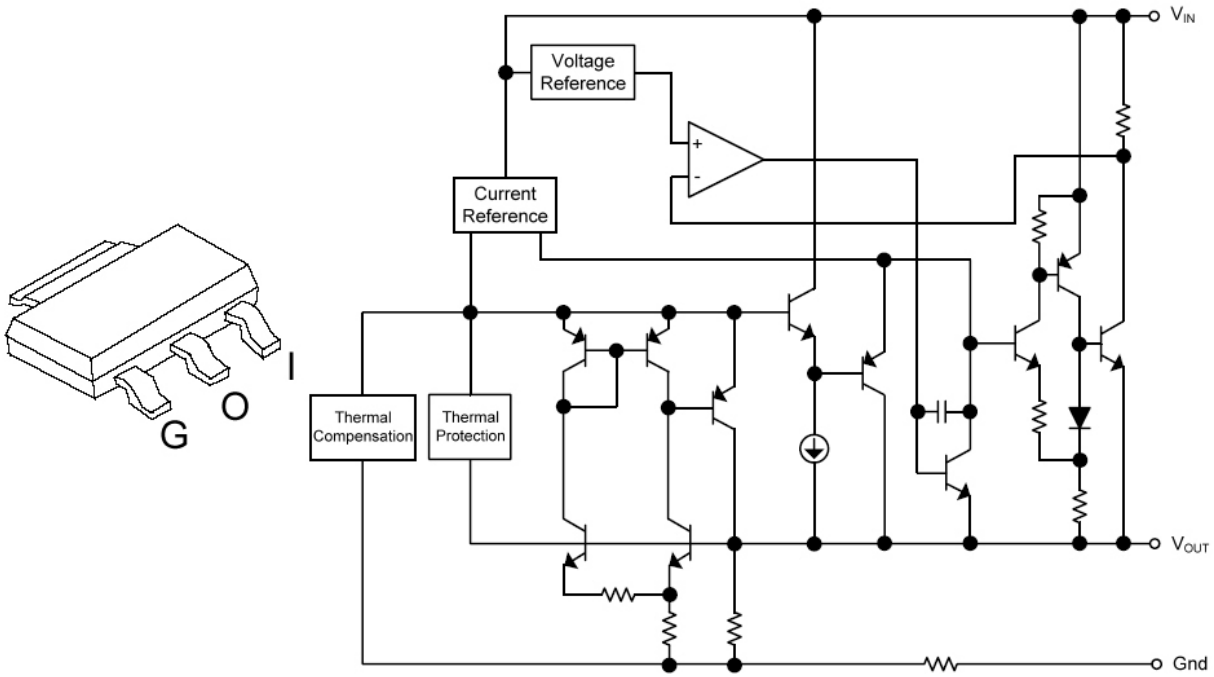

3. IC3 — HEF4066BT

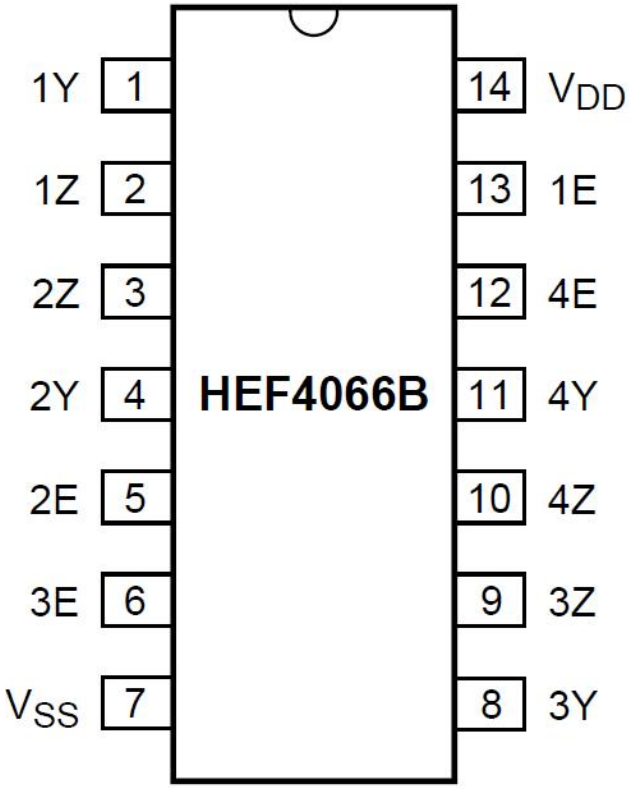

4. IC4 — XC62FP2002PRN

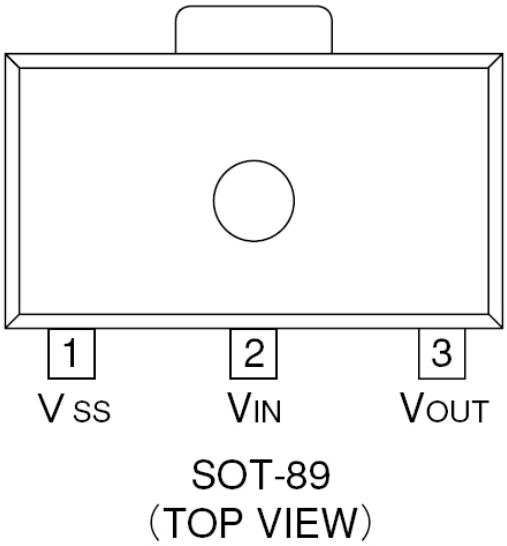

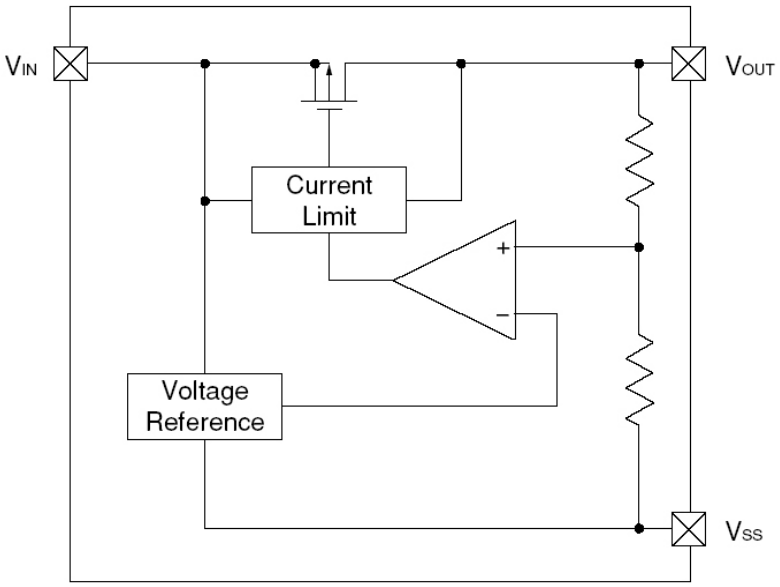

5. IC5 — XC61CN2402MRN

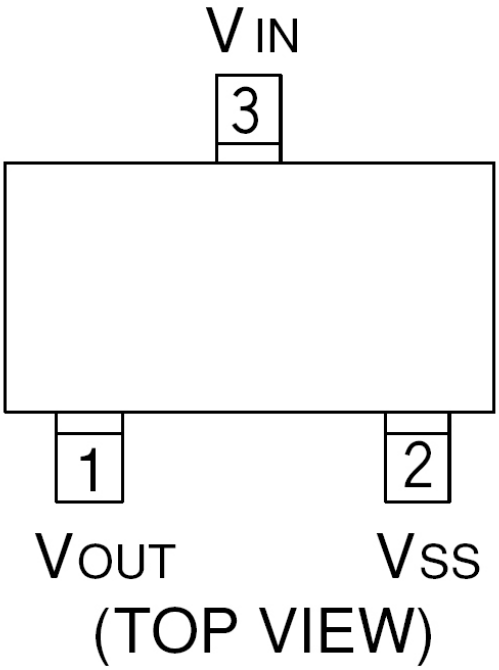

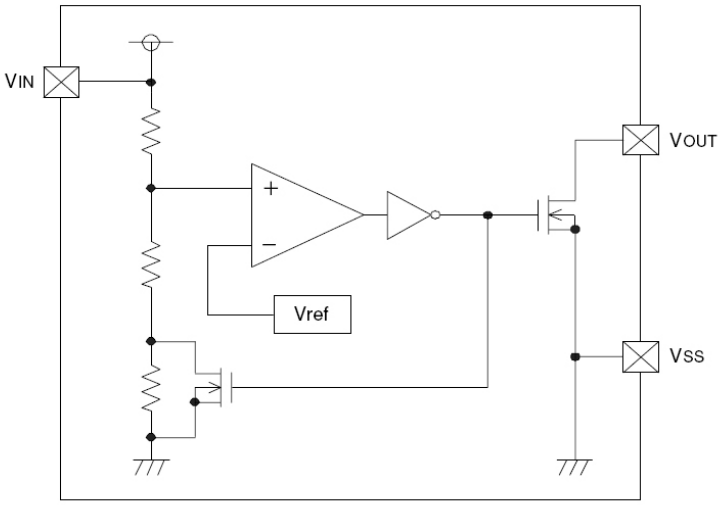

6. IC20 — M2115

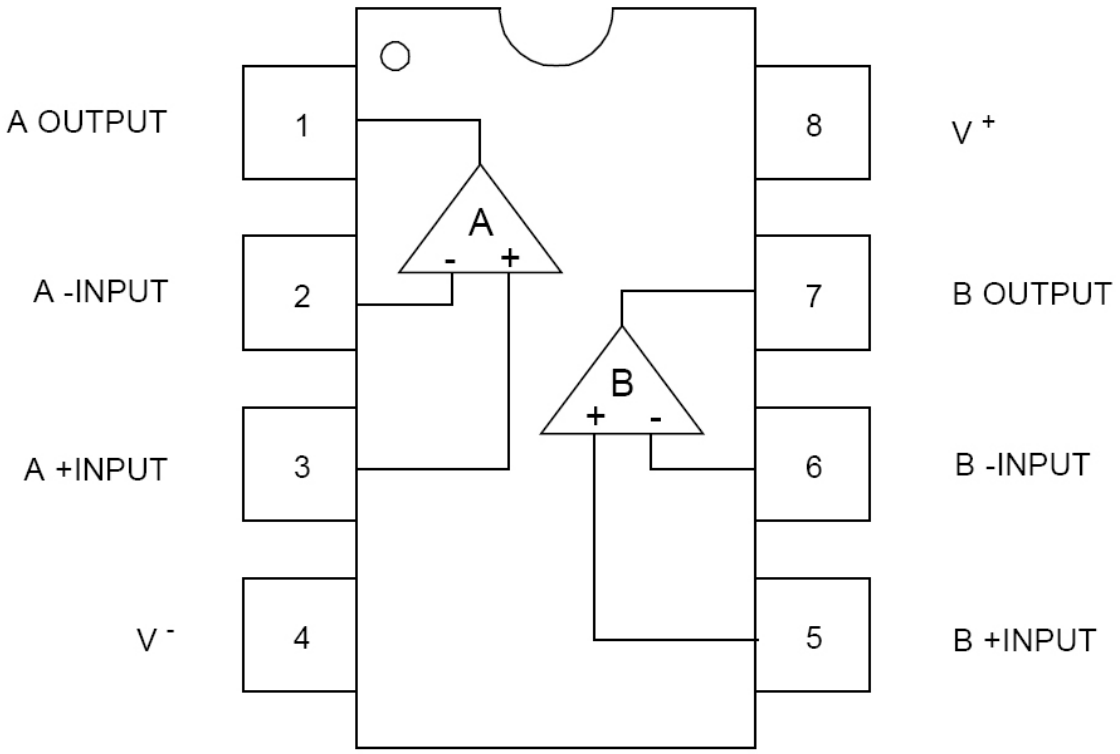

7. IC21 — TC7W53FU

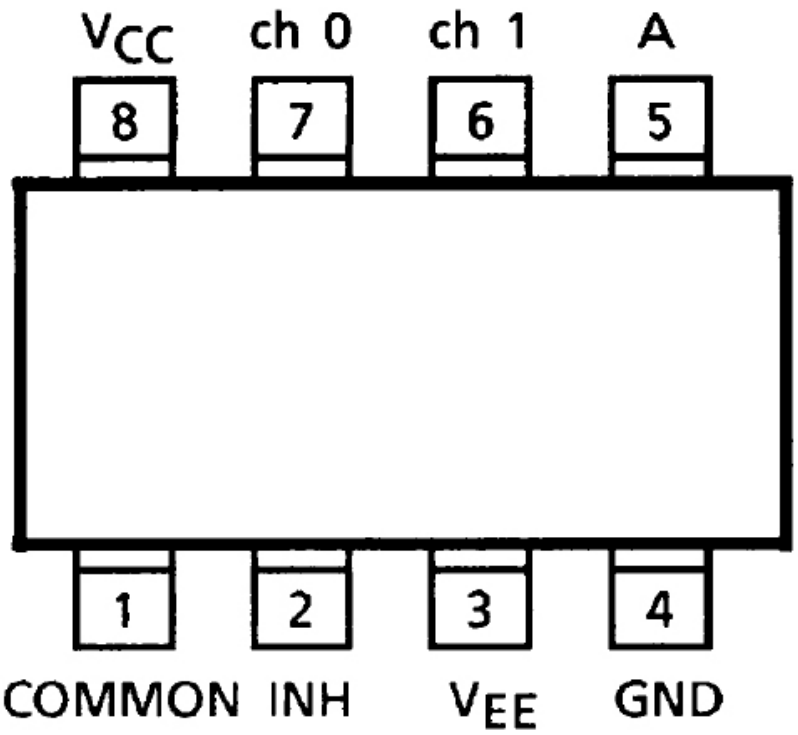

8. IC400 — TDA7266SA

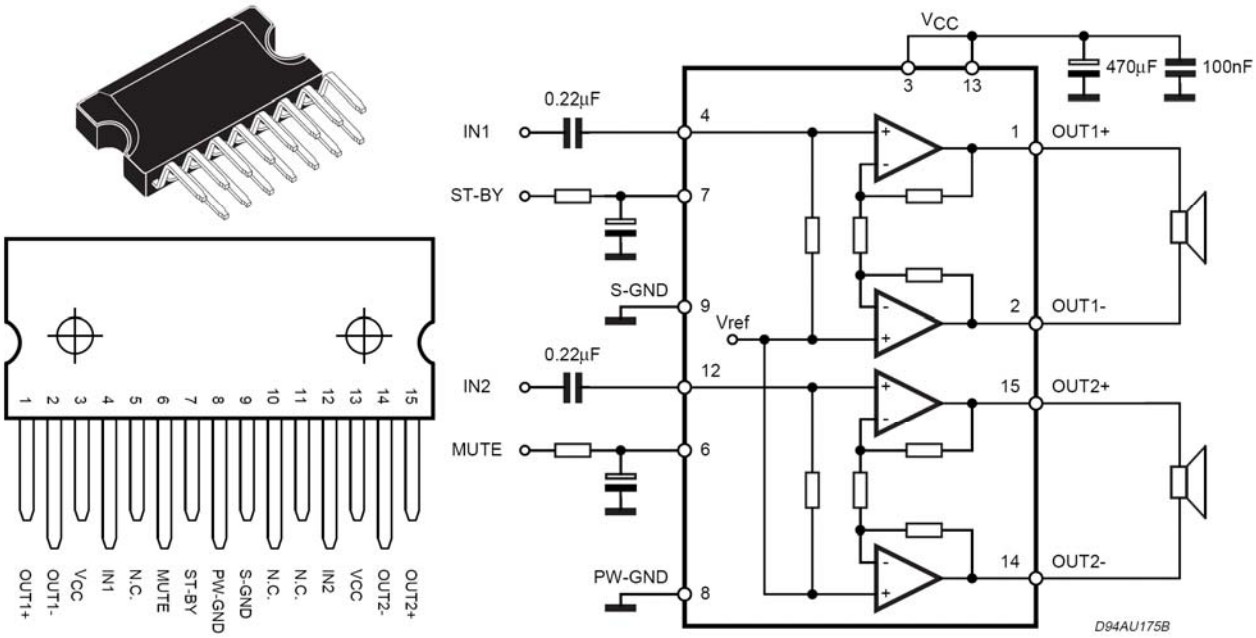

9. IC401 — UTC4580E

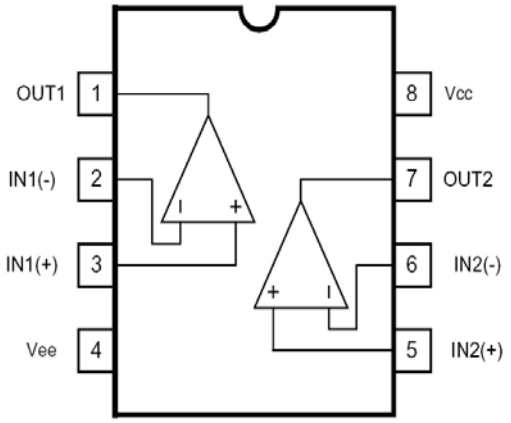

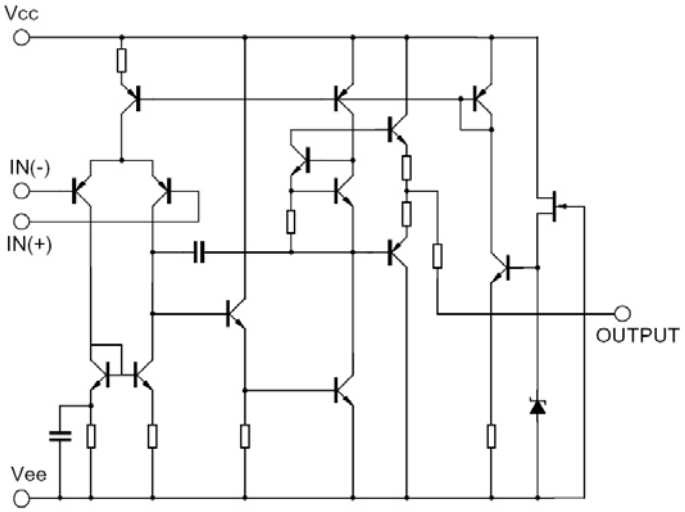

10. IC402 — L7808CV

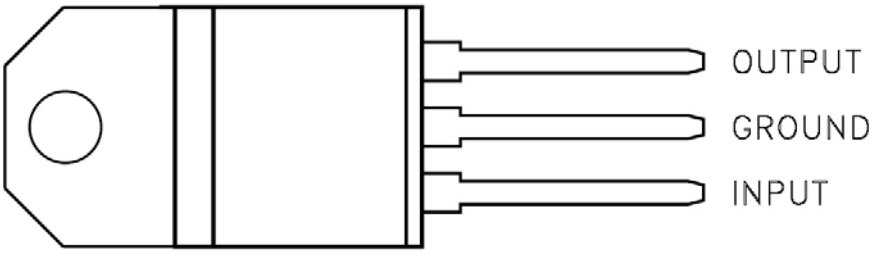

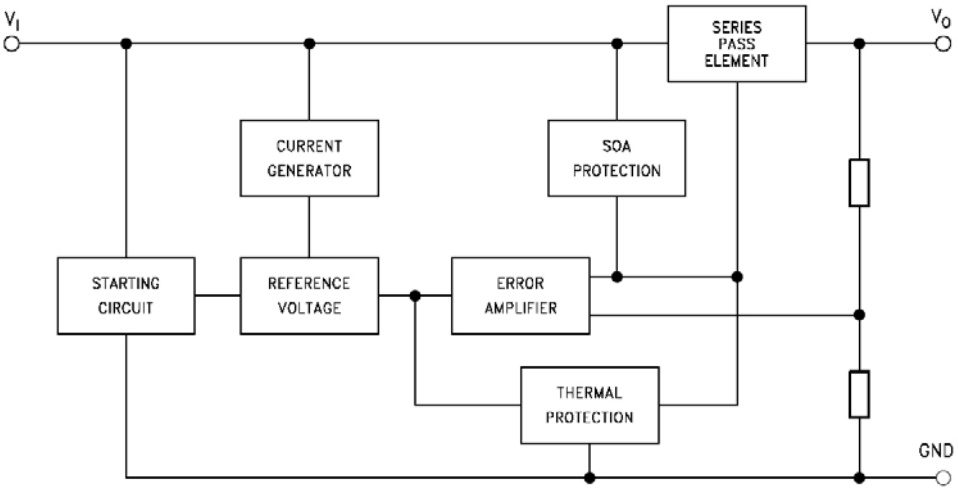

SEMICONDUCTOR LEAD IDENTIFICATIONS

Transistors

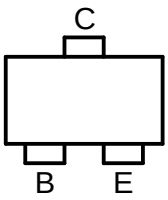

2SA812

2SC1623

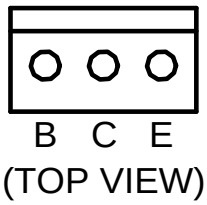

2SB834L

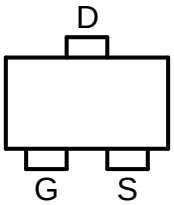

2SJ621

(E: Emitter C: Collector B: Base S: Source G: Gate D: Drain)

Diodes

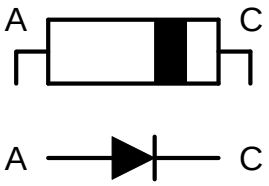

FR204

SR240

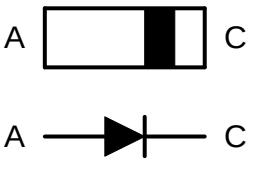

MM4148

(A: Anode C: Cathode)

IC AND TRANSISTOR VOLTAGE CHART

IC1 — Si4835-B30-GU

PIN	FM	AM	AUX	BT	PIN	FM	AM	AUX	BT
1	0	0	0	0	**13**	0	0	0	0
2	3.1	3.1	3.1	3.1	**14**	0	0	0	0
3	1.0	1.0	1.0	1.0	**15**	3.0	3.0	3.0	3.0
4	0.6	0.6	0.6	0.6	**16**	0	0	0	0
5	0.3	0.3	0.3	0.3	**17**	0	0	0	0
6	0	0	0	0	**18**	0.3	0.3	0.3	0.3
7	0	0	0	0	**19**	1.4	1.4	1.4	1.4
8	0	0	0	0	**20**	0	0	0	0
9	0	0	0	0	**21**	0	0	0	0
10	0	0	0	0	**22**	0	0	0	0
11	0	0	0	0	**23**	0.8	0.8	0.8	0.8
12	0	0	0	0	**24**	0.8	0.8	0.8	0.8

IC3 — HEF4066BT

PIN	FM	AM	AUX	BT
1	0.3	0.3	0.3	0.3
2	0.3	0.3	0.3	0.3
3	0.3	0.3	0.3	0.3
4	0.3	0.3	0.3	0.3
5	7.7	0	7.7	7.7
6	0	7.7	0	0
7	0	0	0	0
8	0.6	0.3	0.6	0.6
9	0.3	0.6	0.3	0.3
10	0.6	0.3	0.6	0.6
11	0.3	0.6	0.3	0.3
12	0	7.7	0	0
13	7.7	0	7.7	7.7
14	7.7	7.7	7.7	7.7

IC2 — LD1117AL33

PIN	FM	AM	AUX	BT
INPU	6.6	6.6	6.6	6.6
OUT	3.3	3.3	3.3	3.3
GND	0	0	0	0

IC4 — XC62FP2002PRN

PIN	FM	AM	AUX	BT
INPU	3.3	3.3	3.3	3.3
OUT	2	2	2	2
GND	0	0	0	0

IC5 — XC61CN2402MRN

PIN	FM	AM	AUX	BT
INPU	3.0	3.0	3.0	3.0
OUT	3.0	3.0	3.0	3.0
GND	0	0	0	0

IC20 — UTCM2115

PIN	FM	AM	AUX	BT
1	1.6	1.6	1.6	1.6
2	1.6	1.6	1.6	1.6
3	1.6	1.6	1.6	1.6
4	0	0	0	0
5	1.6	1.6	1.6	1.6
6	1.6	1.6	1.6	1.6
7	1.6	1.6	1.6	1.6
8	3.2	3.2	3.2	3.2

IC21 — TC 7W53FU

PIN	FM	AM	AUX	BT
1	1.6	1.6	1.6	1.6
2	0	0	0	0
3	0	0	0	0
4	0	0	0	0
5	0	0	0	3
6	1.6	1.6	1.6	1.6
7	1.6	1.6	1.6	1.6
8	3.3	3.3	3.3	3.3

IC401— UTC4580E

PIN	FM	AM	AUX	BT
1	3.7	3.7	3.7	3.7
2	3.7	3.7	3.7	3.7
3	0	0	0	0
4	3.7	3.7	3.7	3.7
5	3.7	3.7	3.7	3.7
6	3.7	3.7	3.7	3.7
7	3.7	3.7	3.7	3.7
8	7.6	7.6	7.6	7.6

IC400 — TDA7266SA

PIN	FM	AM	AUX	BT	PIN	FM	AM	AUX	BT
1	5.6	5.6	5.6	5.6	**9**	0	0	0	0
2	5.6	5.6	5.6	5.6	**10**	NC	NC	NC	NC
3	0	0	0	0	**11**	NC	NC	NC	NC
4	1.5	1.5	1.5	1.5	**12**	NC	NC	NC	NC
5	NC	NC	NC	NC	**13**	NC	NC	NC	NC
6	5.2	5.2	5.2	5.2	**14**	NC	NC	NC	NC
7	5.2	5.2	5.2	5.2	**15**	NC	NC	NC	NC
8	0	0	0	0					

IC402 — L7808CV

PIN	FM	AM	AUX	BT
INPU	11	11	11	11
OUT	8	8	8	8
GND	0	0	0	0

Transistor

	PIN	FM	AM	AUX	BT
Q1	B	1.3	1.3	1.3	1.3
	E	3.1	3.1	3.1	3
	C	7.8	7.8	7.8	7.8
Q20	B	7.8	7.8	7.8	7.1
	E	7.8	7.8	7.8	7.8
	C	0	0	0	7.8
Q21	B	3.3	3.3	3.3	0.3
	E	3.3	3.3	3.3	3.3
	C	0	0	0	3.1
Q22	B	0	0	0	4.8
	E	0	0	0	0
	C	3.3	3.3	3.3	0

	PIN	FM	AM	AUX	BT
Q23	B	0	0	0	1.9
	E	3.3	3.3	3.3	1.3
	C	7.8	7.8	7.8	1.4
Q400	B	0	0	0	0
	E	11.6	11.6	11.6	11.6
	C	11	11	11	11
Q401	B	0.7	0.7	0.7	0.7
	E	0	0	0	0
	C	0	0	0	0
Q402	B	3.6	3.6	3.6	3.6
	E	2.9	2.9	2.9	3
	C	7.6	7.6	7.6	7.5
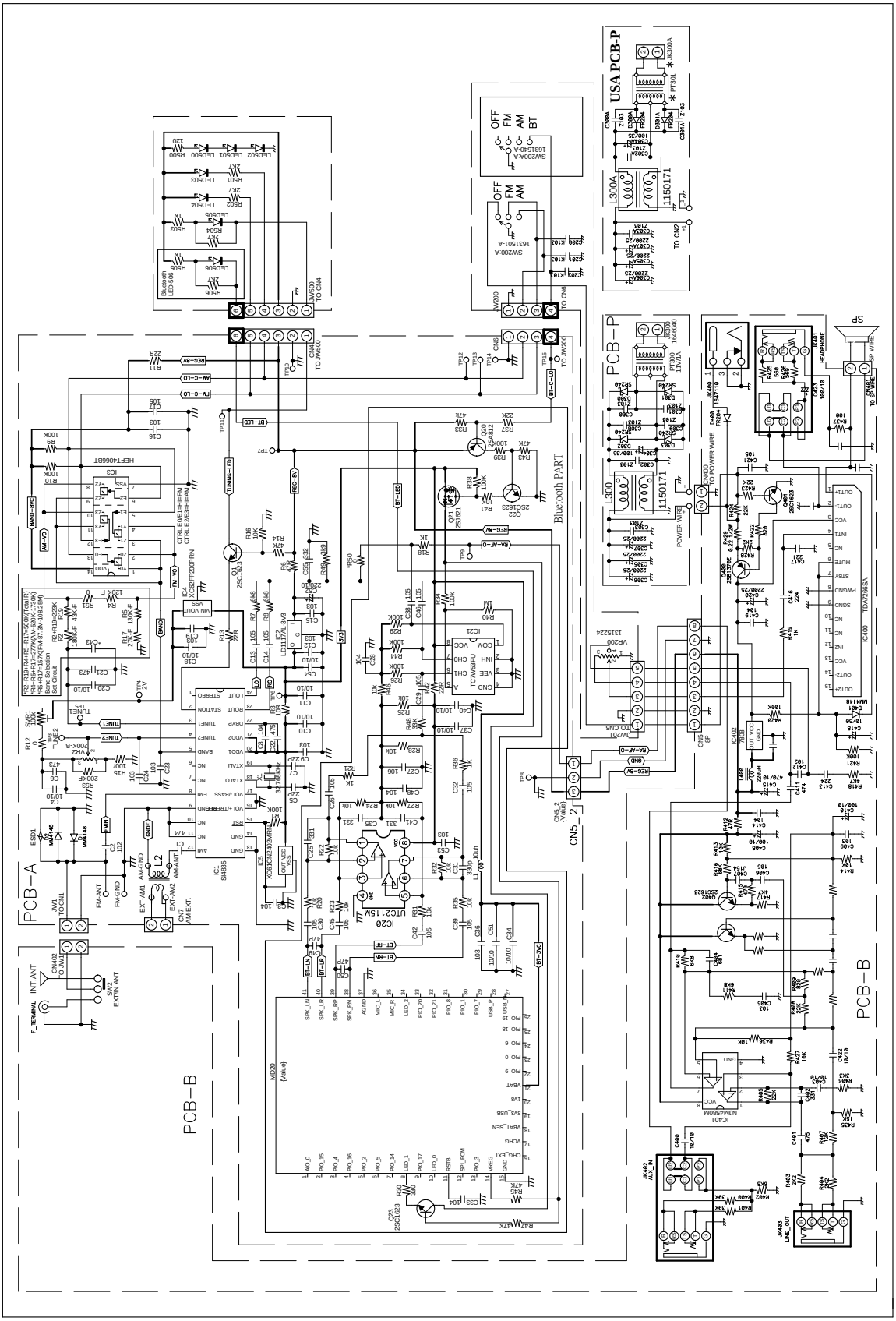
ALL SCHEMATIC DIAGRAM